METALLIC PRODUCTS
Built for More

FLORIDA PRODUCT APPROVED FIXED AND ADJUSTABLE WALL LOUVERS

Take advantage of fresh air with Metallic Products' wall louvers. Specifically designed for pre-engineered metal building wall panels, wall louvers are built for proper air flow in and out of your metal building, while remaining weather resistant. Metallic Products' wall louvers are available in both fixed and operable models.

Fixed Blade Louver

Center-Pivot Adjustable Louver

STATIONARY LOUVERS

Fixed louvers feature 45° blades, with 4-1/2" depth, and riveted to louver frame for security. Fixed louvers have 55% free area.

OPERABLE LOUVERS

Adjustable louvers feature roll-formed blades with plated twin link pivot brackets riveted to blade and connected with 1/4" zinc plated rod. Brass pivot bushings assure smooth, noncorrosive and long-lasting operation. Standard operator is by reinforced cast aluminum hand crank. Louvers can be factory or field modified for chain operation when louver is installed where hand crank is not accessible. Motorized operators are also available. Blade edge seals are installed for maximum air sealing. Adjustable louvers have 55% free area, when fully opened to a 45° angle.

PRODUCT DESCRIPTION	SUB-FRAMING ATTACHMENT	FRAME TYPE	FLORIDA APPROVAL NUMBER
Fixed Blade Louver	24-Gauge Steel Min.	Flat or Die-Formed	12256.1
Center-Pivot Adjustable Louver	24-Gauge Steel Min.	Flat or Die-Formed	12256.2

NOTE

The sill is tapered to provide drainage and exclude moisture.

All welds are water tight and made from non-corroding siliconized bronze wire.

SPECIFICATIONS

FRAME

18-gauge galvanized steel

BLADES

18-gauge galvanized steel

FEATURES

Before painting, louvers are chemically treated. Louvers can be painted to match pre-selected colors by manufacturer. Standard paint is an electrostatically applied powder paint, 2mm thick oven-baked finish.

FOR ADJUSTABLE LOUVERS

After the paint process is completed, an extruded weather stripping is applied to the edge of each blade to ensure virtual air tightness in the closed position.

INSECT AND BIRD SCREEN

Aluminum screen cloth installed in an extruded removable, rewireable aluminum frame

METALLIC PRODUCTS QUALITY GUARANTEE EST. 1962 BUILT FOR MORE

7777 Hollister Street | Houston, Texas 77040 | 713.856.9696 | mpvent.com

TECHNICAL SPECIFICATIONS:

Vertical Cross Section Detail

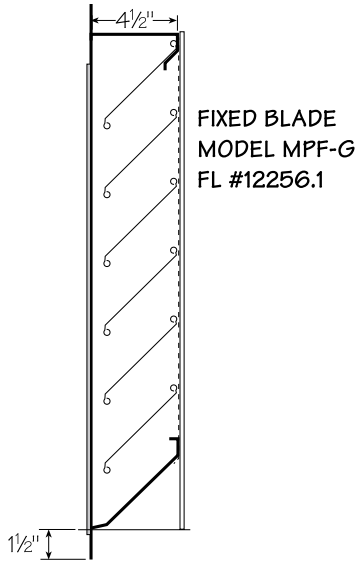

FIXED BLADE MODEL MPF-G FL#12256.1

Frame: 18-gauge galvanized steel 4-1/2" deep 1-1/2" flat flange.

Finish: Louvers can be painted to match pre-selected colors by manufacturer. Standard paint is an electrostatically-applied polyester paint, 2 mm thick and then oven baked finish.

Insect and Bird Screen: Aluminum screen cloth installed in an extruded removable, rewireable aluminum frame.

Blades: 18-gauge galvanized steel. 45° blades, 4-1/2" depth, riveted. 55% free area.

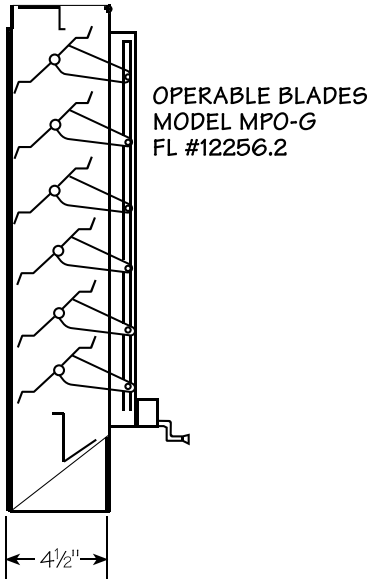

OPERABLE BLADES MODEL MPO-G FL#12256.2

Frame: 18-gauge galvanized steel 4-1/2" deep 1-1/2" flat flange.

Finish: Louvers can be painted to match pre-selected colors by manufacturer. Standard paint is an electrostatically-applied polyester paint, 2 mm thick and then oven baked finish.

Insect and Bird Screen: Aluminum screen cloth installed in an extruded removable, rewireable aluminum frame.

Blades: 18-gauge galvanized steel. 45° blades (fully opened), 4" depth, 55% free area.

Blade Operations: Twin link brackets plated steel assembled with double brass pivot and set screw.

Connecting Rod: 1/4" zinc plated steel.

Operator: Standard operator is by a reinforced cast aluminum hand crank.

Optional: Motorized operator; or chain operator of #35 sash chain, with plastic-coated chain pull handle.

FLORIDA PRODUCT APPROVAL NOTES

- Building Envelope Components are Florida Statute required (FS 553.842) to have Florida Product Approvals
- Statewide Building Envelope Products are approved by the Florida Building Commission
- Florida Product Approvals of building envelope components/ systems are certified to structural resistance properties in the Florida Building Code
- Metallic Products' ventilators are structurally tested by Florida approved testing laboratories to code standards and are also texted for impact resistance and related properties
- Metallic Products' evaluation reports contain wind resistance data that is certified and approved by the Florida Building Commission for use in demonstrating code compliance
- Metallic Products' product approvals are evaluated by a third-party Florida Professional Engineer who is registered with the Florida Building Commission
- Metallic Products' ventilators are manufactured under an audited production Quality Assurance (QA) program to ISO standard 17020 by an ANSI accredited agency