Evaluation Report

Die Formed Skirt Ridge Ventilator
"12 Inch Throat"

Manufacturer

Metallic Products Corporation
7777 Hollister Road
Houston, TX 77040
(713) 856-9696

For

Florida Product Approval
 # FL 12805.9 R3
Florida Building Code 5th Edition (2014)
Per Rule 61G20-3

Method:	**2 - B**
Category:	**Roofing**
Sub - Category:	**Roofing Accessories that are an Integral Part of the Roofing System**

Product Name:	*12 Inch Throat Die Formed Skirt Ridge Ventilator*
Support Material:	*16 ga. Steel Purlins*

Digitally signed by James L. Buckner, P.E.
Electronically signed and sealed documents shall comply with the provisions of FAC Rule 61G15-23.

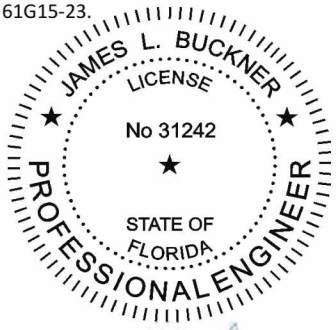

2016.08.26 10:16:44 -04'00'

Prepared by:
James L. Buckner, P.E., SECB
Florida Professional Engineer # 31242
Florida Evaluation ANE ID: 1916
Project Manager: Youry Demosthenes
Report No. 15-108-DFSVent-12Tto16gaPurl-ER.2
Date: 8 / 22 / 16

Contents:
Evaluation Report Pages 1 – 6

Manufacturer: **Metallic Products Corporation**

Product Name: **Die Formed Skirt Ridge Ventilator**

Product Category: Roofing

Product Sub-Category Roofing Accessories that are an Integral part of the Roofing System

Compliance Method: State Product Approval Rule 61G20-3.005 (2) (b)

Product Description: Metallic Products' 12 Inch Throat Die Formed Skirt Ridge Ventilators are primarily used on metal roofing system application. These ventilators have an integral damper that open to any degree from fully open to completely closed. Each unit contains flashing of either individual units or continuous runs installation.

Product Assembly as Evaluated: Refer to Page 4 of this report for product assembly components/materials & standards:

1. Die Formed Skirt Ridge Ventilator
2. Fasteners

Ventilator Base Support:

Type:
Steel Purlins
(Design of support system is outside the scope of this evaluation)

Description:

- Material: Steel
- Thickness: 16 Gauge minimum
- Yield Strength: 50 ksi minimum

Roof Slope: Minimum slope shall be in compliance with FBC Chapter 15 based on the type of roof covering, applicable code sections and in accordance with manufacturer's recommendations.

Performance:

Wind Uplift Resistance

* Design Uplift Pressure: **- 50 PSF**

** Allowable design pressure for allowable stress design (ASD) with a margin of safety of 2 to 1.*

Tested Impact Resistance

- Standard: ASTM E1886-02 (Large Missile Impact)
- Results: Pass

Performance Standards:

The following test protocols were performed to demonstrate compliance with the intent of the code as this product does not specifically addressed the performance standard in the code.

- **ASTM E330-02 –** *Standard Test Method for Structural Performance of Exterior Windows, Doors, Skylights and Curtain Walls by Uniform Static Air Pressure Difference*
- **ASTM E1886-02 –** *Standard Test Method for Performance of Building Envelope Impacted by Missile(s) and Exposed to Cyclic Pressure Differentials*

Standards Equivalency:

- The ASTM E330-97e1 standard version used to test the evaluated product assembly is equivalent to ASTM E330-02 standard version adopted by the Florida Building Code 5th Edition (2014).

Code Compliance:

The product described herein has demonstrated compliance with the Florida Building Code 5th Edition (2014), Section 1709.2.

Evaluation Report Scope:

This product evaluation demonstrates compliance of this product with the structural wind load requirements of the Florida Building Code, as related to Florida Product Approval Rule 61G20-3.001.

Limits of Use:

- This evaluation report for "Optional Statewide Approval" contains technical documentation, specifications and installation method(s) which include "Limitations and Conditions of Use" throughout the report in accordance with Rule 61G20-3.005. Per Rule 61G20-3.004, the Florida Building Commission is the authority to approve products under "Optional Statewide Approval".
- Option for application outside "Limitations and Conditions of Use"
  Rule 61G20-3.005(1)(e) allows engineering analysis for "project specific approval by the local authorities having jurisdiction in accordance with the alternate methods and materials authorized in the Code". Any modification of the product as evaluated in this report and approved by the Florida Building Commission is outside the scope of this evaluation and will be the responsibility of others.
- This report is a building code product evaluation per FLPE rule (FAC) 61G15-36 to comply with Florida product approval rule (FAC) 61G20-3. This evaluation report is part of the Florida Building Commission approval for the listed code related criteria. This report by James Buckner, P.E. and CBUCK Engineering is not a design certification of code compliance construction submittal documentation, per FBC section 107, for any individual structure, site specific or permit design.
- Refer to applicable building code section for ventilation requirements.
- Design of support system is outside the scope of this report.
- Fire Classification is outside the scope of Rule 61G20-3, and is therefore not included in this evaluation.
- This evaluation report does not evaluate the use of this product for use in the High Velocity Hurricane Zone code section. (Dade & Broward Counties)

Quality Assurance:

The manufacturer has demonstrated compliance of roof panel products in accordance with the Florida Building Code and Rule 61G20-3.005 (3) for manufacturing under a quality assurance program audited by an approved quality assurance entity through **Architectural Testing, Inc. – QA** (FBC Organization #: QUA 1844)

Component(s)
Material Standards:

Die Formed Skirt Ridge Ventilator

Exterior Material	Steel
Thickness:	26 gauge
Yield Strength:	50 ksi Minimum
Corrosion Resistance:	In compliance with FBC Section 1507.4.3
Overall Length:	10‘ (Single Unit)
Overall Height:	18”
Throat Size:	12”

Fastener

Type:	Self-Drilling, Screw
Size:	# 12 × 1” Minimum
Head:	Hex-Head w/ weather Seal Washer
Corrosion Resistance:	Per FBC Section 1506.6 and 1507.4.4
Standard:	Per SAE J78-1979

Installation:

Installation Method:
(Refer to Page 5 of this evaluation report.)

Attach 12 Inch Throat Die Formed Skirt Ridge Ventilator to 16 Ga. steel supports with # 12 self-drilling screw, with minimum penetration through support 3/4 in

- Locate Fasteners along the length of the ridge vent
- Fastener Spacing: 12 in. o.c. & 6 in. from each end

“12 Inch Throat Die Formed Skirt Ridge Ventilator” shall be installed in compliance with the installation method listed in this report. The installation method described herein is in accordance with the scope of this evaluation report. Refer to manufacturer’s installation instructions as a supplemental guide for attachment.

Evaluated Referenced Data:

1. ASTM E330-02 Uniform Static Air Pressure Difference Test
   By: Architectural Testing, Inc. – Test Lab (FBC Organization #TST ID: 1910)
   Report Number: 60793.01.801-44, Dated: 12/14/05 Revision 2: 03/26/09
2. ASTM E1886-02 Impact Test
   By: Architectural Testing, Inc. – Test Lab (FBC Organization #TST ID: 1910)
   Report Number: 60793.01.801-44, Dated: 12/14/05 Revision 2: 03/26/09
3. Quality Assurance
   By Architectural Testing, Inc. – QA, (FBC Organization #QUA ID:1844)
4. Equivalency of Test Standard Certification
   By James L. Buckner, P.E. @ CBUCK Engineering
5. Certification of Independence
   By James L. Buckner, P.E. @ CBUCK Engineering
   (FBC Organization # ANE 1916)
6. Engineering Analysis
   By CBUCK Engineering
   Report #C14-120, Dated: 4/23/15

Installation Method

Metallic Products

12 Inch Throat Die Formed Skirt Ridge Ventilator

Attached to 16 Ga. Steel Supports

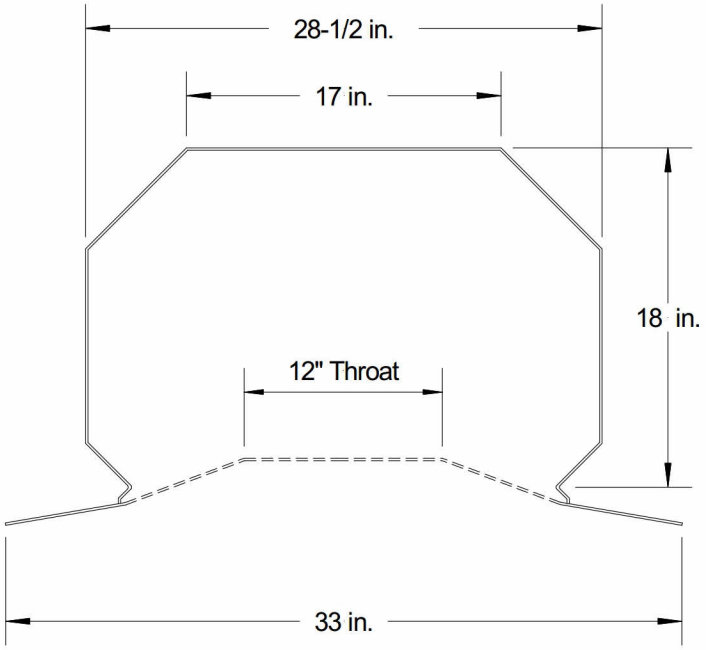

Side Section View

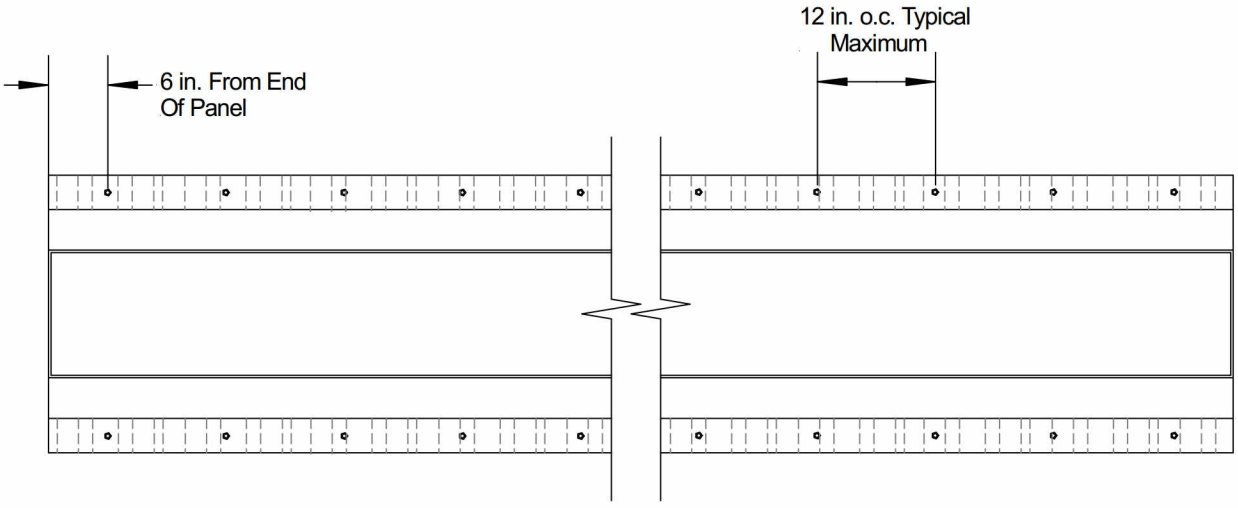

Top Plan View
Screw Locations

Installation Method
Metallic Products
12 Inch Throat Die Formed Skirt Ridge Ventilator
Attached to 16 Ga. Steel Supports

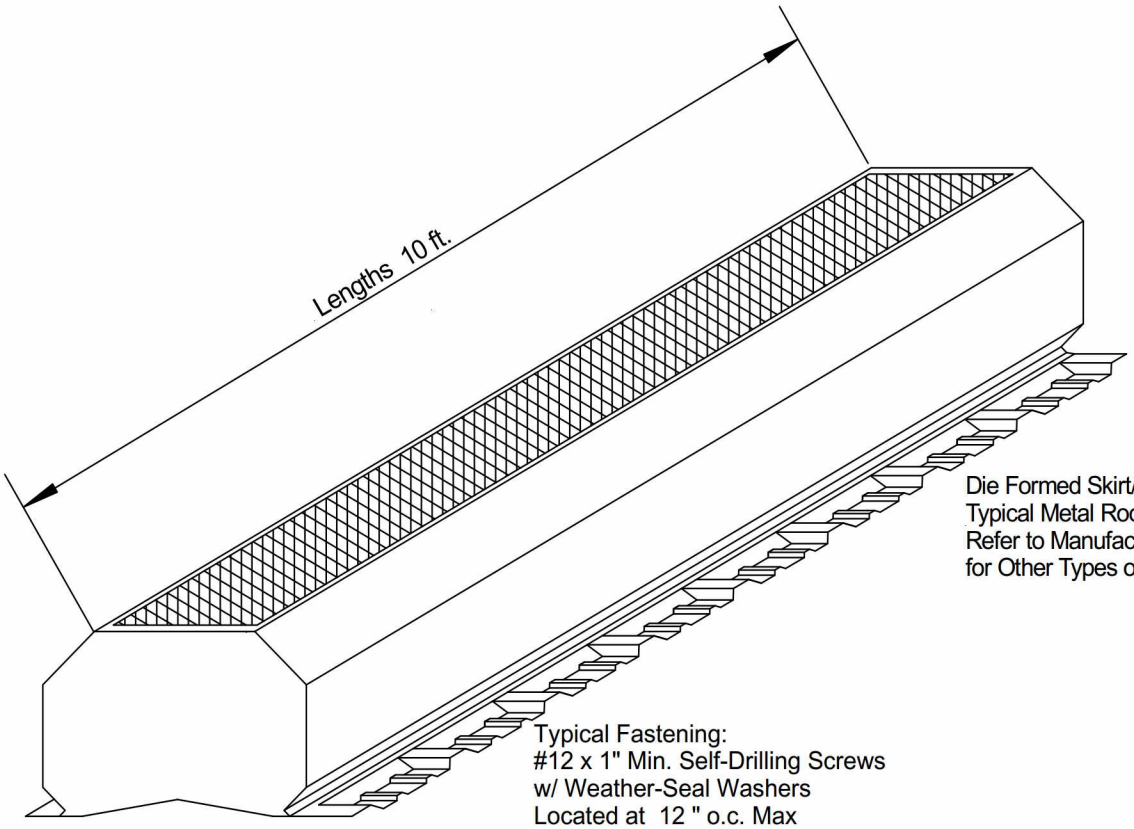

Isometric View